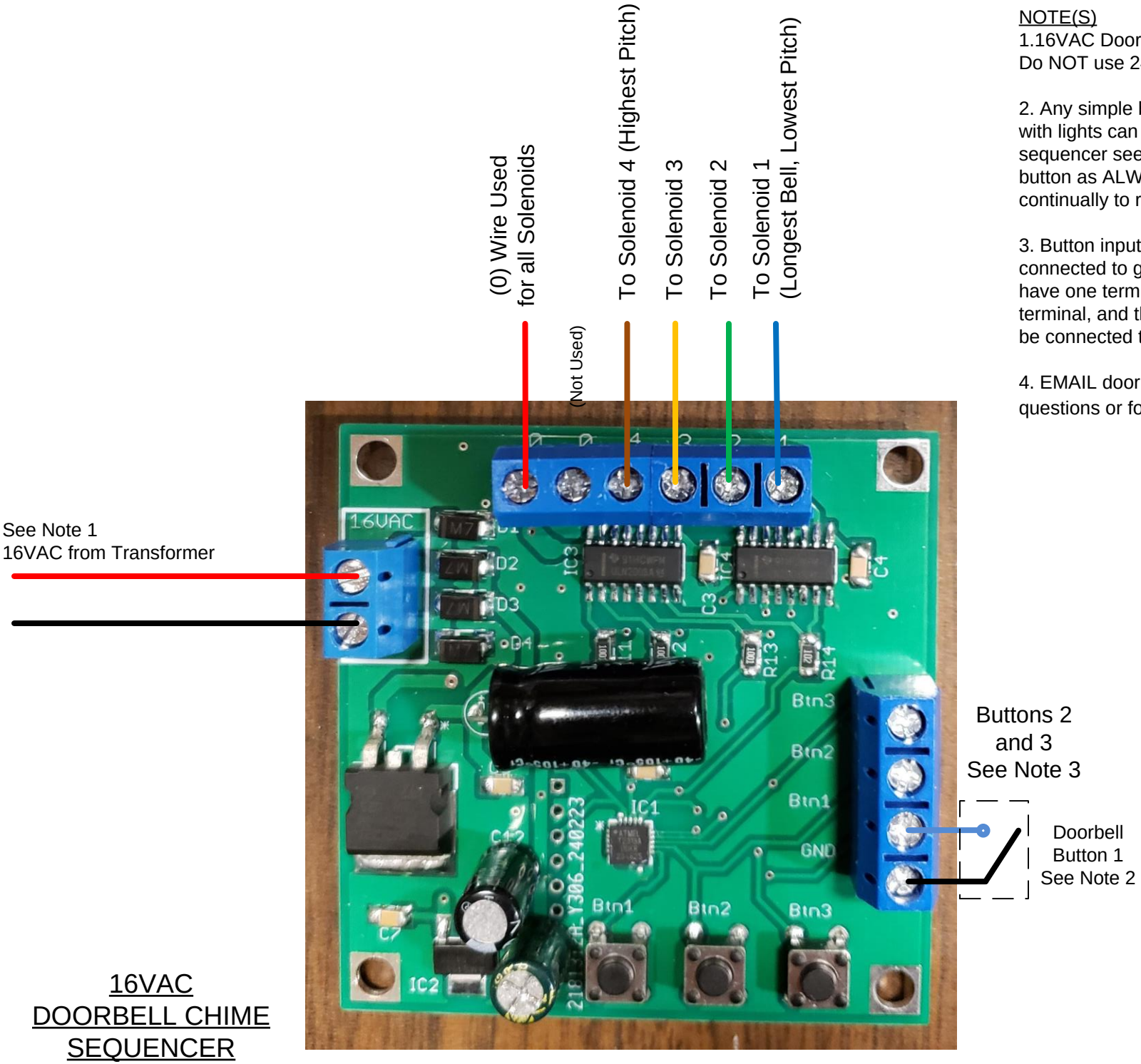

NOTE(S)

1.16VAC Doorbell Transformer is required. Do NOT use 24VAC transformers.

2. Any simple button can be used. Buttons with lights can NOT be used. The sequencer sees the signal from a lighted button as ALWAYS closed, and the bell will continually to ring until you lose your mind.

3. Button inputs 2 and 3 activate when connected to ground. All buttons should have one terminal connected to input terminal, and the other button pin should be connected to GND terminal.

4. EMAIL doorbell@RiddledTV.com for any questions or for purchase information.

16VAC DOORBELL CHIME SEQUENCER

Rev	Date	Description

Designed:	Jim Riddle
Drawn:	Jim Riddle
Date:	Jan 22, 2025

DRAWING TITLE

16VAC DOORBELL CHIME SEQUENCER - CONNECTION DIAGRAM

DRAWING NUMBER

DBAC-1